139.01.30 OBSTACLE LIMITATIONS AND MARKINGS OUTSIDE AERODROME OR HELIPORT (effective 1 August 2012)

1. Marking of obstacles

1.1 Applicability

(1) If a difference between a standard prescribed in ICAO Annex 14 and the SA-CATS 139 exists, the SA-CATS 139 standard shall prevail.

1.2. Structures to be marked

(1) Any structure exceeding 45 m above ground level, or structures where the top of the structure exceeds 150 m above the MEAN ground level, like on top of a hill, the mean ground level considered to be the lowest point in a 3 kilometre radius around such structure. Structures lower than 45 m, which are considered as a danger or a potential danger to aviation, shall be marked as such when specified.

(2) Overhead wires, cables, etc., crossing a river, valley or major roads shall be marked and in addition, their supporting towers marked and lighted if an aeronautical study indicates that it could constitute a hazard to aircraft.

NOTE: Wind turbine generator (Windfarms) support structures are dealt with separately.

1.3. Painted Markings (Day Markings)

(1) Paint Colours

Alternate sections of international orange or signal red and white paint shall be used as they provide maximum visibility of an obstruction by contrast in colours.

The colours shall comply with the National Standard SANS 1091 2004 as indicated –

(a) INTERNATIONAL ORANGE

S2075-Y70R

(b) SIGNAL RED

S1580-Y90R

(c) CLOUD WHITE

S0505-G20Y

(d) GOLDEN YELLOW

S3040-Y

(2) Paint Standards

Quality paints compatible with the relevant surfaces are to be used and applied to the published South African standards for the relevant surfaces.

(3) Surfaces Not Requiring Paint

Ladders, decks, and walkways of steel towers and similar structures need not be painted if a smooth surface presents a potential hazard to maintenance personnel. Paint may also be omitted from precision or critical surfaces if it would have an adverse effect on the transmission or radiation characteristics of a signal. This should not reduce the overall marking effect of the structure.

(4) Solid Pattern

Obstacles should be coloured in orange (or red) if the structure has a horizontal dimension of less than 1,5 m and vertical dimensions not exceeding 4,5 m.

(5) Checkerboard Pattern

Alternating rectangles of orange (or red) and white are normally displayed on the following structures:

(a) Water reservoirs, fuel storage tanks, and grain storage silos when required.

(b) Buildings, as required.

(c) Large structures where its projection on any vertical plane equals or exceeds 4.5 m in both dimensions. The pattern should consist of rectangles of not less than 1.5 m and not more than 3 m on a side, the corners being of the darker colour. The colours of the pattern should contrast each with the other and with the background against which they will be seen. Orange (or red) and white should be used. However, if it is impractical because of the size or shape of a structure, the patterns may have sides less than 1,5 m.

When possible, corner surfaces should be coloured orange.

(6) Alternate Bands

Alternate bands of orange (or red) and white are normally displayed on structures when –

(a) it has essentially unbroken surfaces and has one dimension, horizontal or vertical, greater than 1,5 m and the other dimension, horizontal or vertical, less than 4,5 m, or

(b) it is of skeletal type with either a vertical or a horizontal dimension greater than 1.5 m, and Includes the following structures –

(i) Communication towers and catenary support structures.

(ii) Poles.

(iii) Smokestacks.

(iv) Skeletal framework of storage tanks and similar structures.

(v) Coaxial cable, conduits, and other cables attached to the face of a tower.

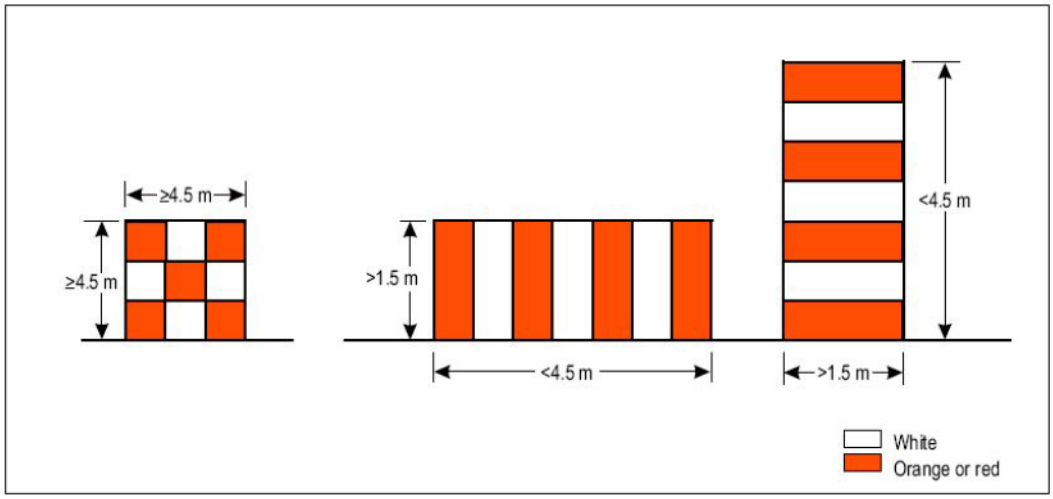

Figure 1

(7) Colour Band Characteristics

The bands should be perpendicular to the longest dimension and have a width approximately 1/7 of the longest dimension or 30 m, whichever is less, and not less than 0,65 m. The colours of the bands should contrast with the background against which they will be seen. Orange (or red) and white should be used, except where such colours

are not conspicuous when viewed against the background. The bands on the extremities of the object should be of the darker colour.

Marking Band Widths			
Longest Dimension		Band width	
Greater than (m)	Not exceeding (m)		
4,5	210	1/7	Of longest dimension
210	270	1/9	
270	330	1/11	
330	390	1/13	
390	450	1/15	
450	510	1/17	
510	570	1/19	
Table 1			

Note: Table 1 shows a formula for determining bandwidths and for having an odd number of bands, thus permitting both the top and bottom bands to be of the darker colour.

(8) Skeletal Structures on Top of Buildings

If a flagpole, skeletal structure, or similar object is erected on top of a building, the combined height of the object and building will determine whether marking is required; however, only the height of the object under study determines the width of the colour bands.

(9) Partial Marking

If marking is recommended for only a portion of a structure because of shielding by other objects or terrain, or it is not practicable to mark the full structure, the width of the bands should be determined by the overall height of the structure. A minimum of three bands shall be displayed on the upper third of the structure.

(10) Extensive Structures

Paint markings may be omitted when an aeronautical study indicates that a structure is extensive to the extent that additional marking will not improve the visual impact of the structure.

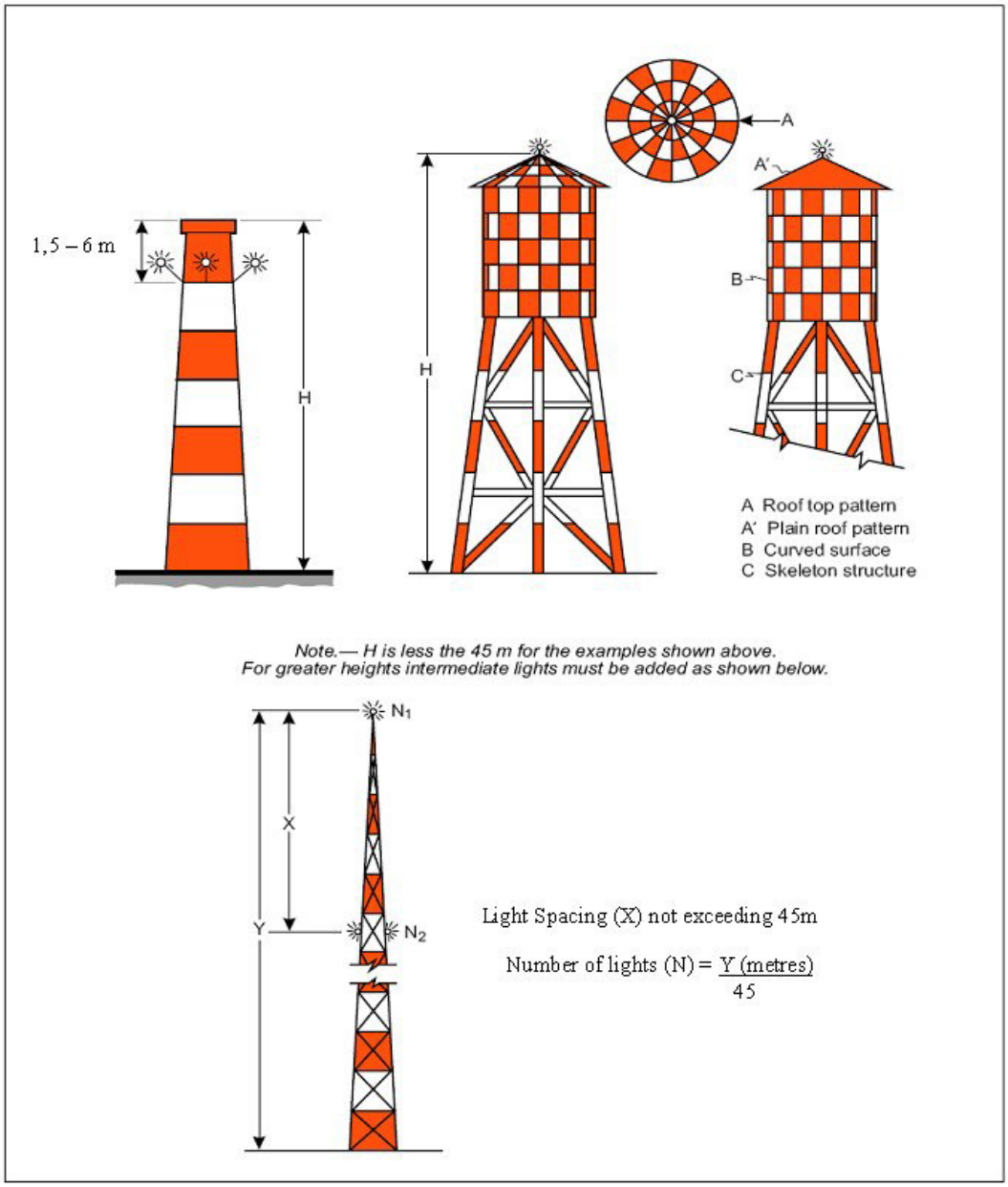

1.4. Markers

Markers are used to highlight structures when it is impractical to make them conspicuous by painting. Markers may also be used in addition to orange (or red) and white paint when additional conspicuousness is necessary for aviation safety. They

should be displayed in conspicuous positions on or adjacent to the structures so as to retain the general definition of structure. They should be recognisable in clear air from a distance of at least 1 000 m and in all directions from which aircraft are likely to approach. Markers should be distinctively shaped, i.e., spherical or cylindrical, so they are not mistaken for items that are used to convey other information. They should be replaced when faded or otherwise deteriorated.

(1) Spherical Markers

Spherical markers are used to identify overhead wires. Markers may be of another shape, i.e., cylindrical, provided the projected area of such markers will not be less than that presented by a spherical marker. The Director may require that additional lighting systems be added to enhance visibility.

(2) Size and Colour

The diameter of the markers used on extensive catenary wires across canyons, lakes, rivers, etc., shall be not less than 60 cm.

Smaller 30 cm spheres are permitted on less extensive power lines or on power lines below 15 m above the ground and within 500 m of an aerodrome runway end. Each marker should be a solid colour such as orange or white.

(3) Installations

(a) Spacing

Markers should be spaced equally along the wire at intervals of approximately 30 m where the marker diameter is 60 cm progressively increasing to 35 m where the marker diameter is 80 cm and further progressively increasing to a maximum of 40 m where the marker diameter is at least 130 cm.

Where multiple wires, cables, etc. are involved, a marker should be located not lower than the level of the highest wire at the point marked. They should be displayed on the highest wire or by another means at the same height as the highest wire. Where there is more than one wire at the highest point, the markers may be installed alternately along each wire if the distance between adjacent markers meets the spacing standard. This method allows the weight and wind loading factors to be distributed. Where 30 cm spheres are used, intervals between markers should be 10 m to 15 m.

(b) Pattern

An alternating colour scheme provides the most conspicuousness against all backgrounds. Overhead wires shall be marked by alternating solid coloured markers of international orange and white. An orange sphere is placed at each end of a line and the spacing is adjusted not to exceed the maximum spacing for the applicable size of spheres used to accommodate the rest of the markers. When less than four markers are used, they should all be international orange.

1.5. Flags

(1) Flags used to mark objects shall be displayed around, on top of, or around the highest edge of, the object. When flags are used to mark extensive objects or groups of closely spaced objects, they shall be displayed at least every 15m. Flags shall not increase the hazard presented by the object they mark.

(2) Flags used to mark fixed objects shall not be less than 0.6 m square and flags used to mark mobile objects, not less than 0.9 m square.

(3) Flags used to mark fixed objects should be orange in colour or a combination of two triangular sections, one orange and the other white, or one red and the other white, except that where such colours merge with the background, other conspicuous colours should be used.

(4) Flags used to mark mobile objects shall consist of a chequered pattern, each square having sides of not less than 0.3 m. The colours of the pattern shall contrast each with the other and with the background against which they will be seen. Orange and white or alternatively red and white shall be used, except where such colours merge with the background.

1.6. Omission or alternatives to marking

Although paint markings are the preferred method of marking, an alternative method of marking by white strobe lights may be approved on application.

1.7. Lighting of objects

(1) High Intensity Flashing White Lighting Systems

High intensity lighting systems are more effective than orange/red and white paint under certain ambient light conditions involving the position of the sun relative to the direction of flight and therefore may be recommended instead of marking. When operated 24 hours a day, other

methods of marking and lighting may be omitted. High intensity lighting systems are not recommended on structures of 150 m AGL or less.

(2) Medium Intensity Flashing White Lighting Systems

When medium intensity type “A” flashing white lighting systems are operated 24 hours a day on structures of less than 150 m AGL, other methods of marking may be omitted. When used on structures in excess of 150 m AGL it shall only be used in conjunction with paint markings.

(3) Dual Lighting Systems

When approved, a dual lighting system consisting of medium intensity white strobe lights with a peak intensity of at least 20 000 candela for daytime use and steady burning red lights of at least 32 candela intensity for twilight and night time use may be used on mast structures not exceeding 150m above ground level (AGL).

Dual lighting systems would require uninterruptible power supply systems with at least 12 hours of autonomy. These lighting systems are subject to monitoring and immediate repair in the event of failure.

(4) Omission of Markings

All markings may be omitted, on application, in bona fide nature conservation areas on structures not exceeding 150m.

1.8. Standards of lighting

The characteristics of lights shall comply with Annex 14 chapter 6 table 6-3.

Red aeronautical obstacle lights on top of structures that require marking shall be dual units for redundancy purposes unless the system is monitored and failed units can be replaced within one working day.

1.9. Lighting systems

(1) Red, steady burning low intensity type lights of at least 10 candela intensity shall be used when required on structures not exceeding 45 m AGL.

(2) Red steady (or flashing) low intensity type B lights of at least 32 candela intensity shall be used on structures exceeding 45 m but not exceeding 150m AGL.

Intermediate lights shall consist of at least 3 single units spaced at 120 degree intervals, depending on the diameter of the structure, and may be low intensity type “A” lights of at least 10 candela. When flashing lights are used, the flashes shall be synchronised.

(3) Structures exceeding 150 m AGL shall comply with the standards of Annex 14 chapter 6 unless specified differently.

(4) Temporary Construction Equipment Lighting

Construction cranes in urban areas should be painted in a conspicuous colour that is in a sharp contrast to the background. In addition, the jib should be illuminated with red flashing low intensity type B lights clearly defining the outline and extremities of the jib as well as the highest point of the crane. Spacing between lights should not exceed 45m.

1.10. Chimneys, smoke stacks, and similar solid structures

When required, lights may be displayed as low as 6m below the top to avoid the obscuring effect of deposits and heat generally emitted by this type of structure. It is important that these lights be readily accessible for cleaning and lamp replacement.

(1) Number of Light Units

(a) The number of units recommended depends on the diameter of the structure at the top. The number of lights recommended below is the minimum.

(b) When the structure diameter is:

(i) 6 m or less. Three light units per level.

(ii) Exceeding 6 m but not more 30 m. Four light units per level.

(iii) Exceeding 30 but not more than 60m. Six light units per level.

(iv) Exceeding 60m. Eight light units per level.

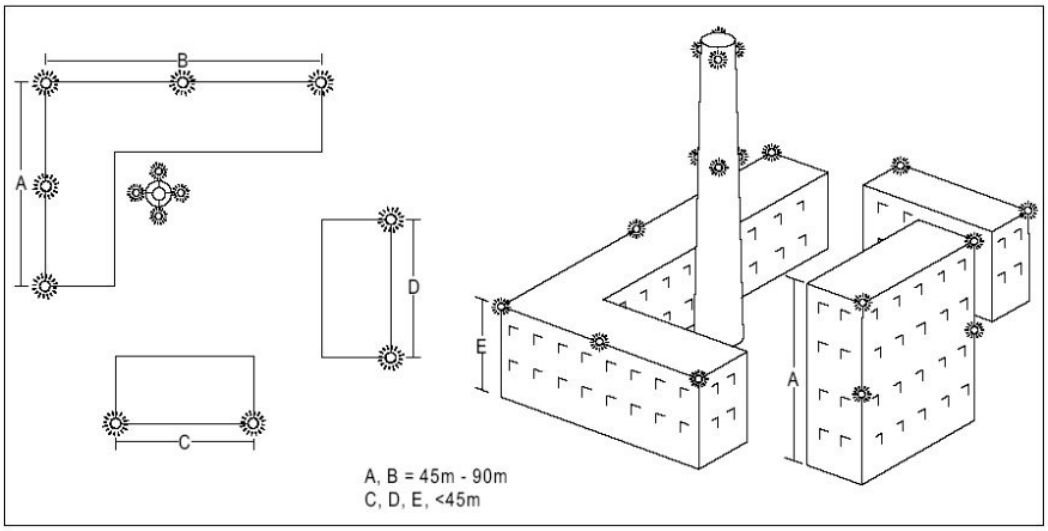

(c) Lighting of buildings and other solid structures may be omitted if an aeronautical study indicated that other means of reaching the required visibility in the form of flood lighting or other effect lighting may suffice. The Director may require an uninterruptible power source for such lighting.

1.11. Alternate method of displaying obstruction lights

When recommended in a CAA aeronautical study, lights may be placed on poles equal to the height of the obstruction and installed on or adjacent to the structure instead of installing lights on the obstruction.

1.12. Bridges

(1) When required, bridge structures shall be illuminated by low intensity type B, steady burning red obstruction lights of at least 32 candela intensity. The Director may require an uninterruptible power source for such lighting. Dual units shall be required for redundancy.

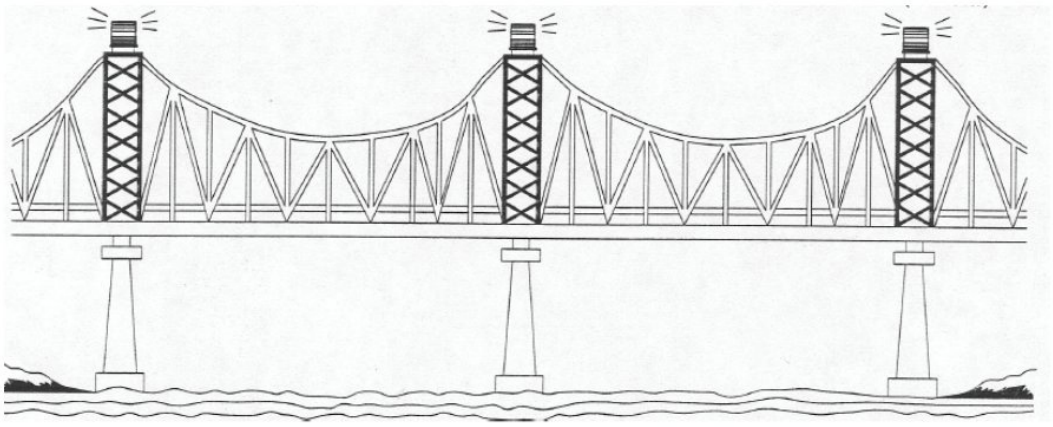

(2) Balloons and other tethered devices

The Director may require that balloons and other tethered devices be illuminated for night time/twilight use.

1.13. Control of lights

Day-to-Twilight. This should not occur before the illumination drops to 646 Lux but should occur before it drops below 377 Lux. Illuminance-sensing device should, if practical, face the Southern sky.

1.14. Wind turbine generators (Windfarms)

(1) Introduction

A wind turbine generator is a special type of aviation obstruction due to the fact that at least the top third of the generator is continuously variable and offers a peculiar problem in as much marking by night is concerned.

When wind turbine generators are grouped in numbers of three or more they will be referred to as “Windfarms”.

(2) Windfarm Placement

Due to the potential of wind turbine generators to interfere on radio navigation equipment, no Windfarm should be built closer than 35km from an aerodrome. In addition much care should be taken to consider visual flight rules routes, proximity of known recreational flight activity such as hang-gliders, en route navigational facilities etc.

(3) Windfarm Configurations

Windfarms come primarily in three predominant configurations, although actual installations may contain one or any combination of the three configurations. These three configurations are linear, cluster, and grid.

(a) Linear configurations are those where the turbines are placed in a line-like arrangement along a ridgeline, the face of a mountain, on a hill or along the borders of a field. The line may be ragged in shape or be periodically broken and may vary from just a few turbines to over several kilometres of wind turbines.

(b) Cluster configurations are those where the turbines are placed in circle-like groups on top of a hill or within a large field. A cluster is typically characterised by having a pronounced perimeter with

various turbines placed inside the circle at various, erratic distances throughout the centre of the circle.

(c) Grid configurations are those where the turbines are arranged in a geographical shape such as a square or a rectangle, with each turbine placed a consistent distance apart in rows, giving the appearance of a square-like pattern.

(4) Windfarm Markings

Wind turbines shall be painted bright white to provide the maximum daytime conspicuousness. The colours grey, blue and darker shades of white should be avoided altogether. If such colours have been used, the wind turbines shall be supplemented with daytime lighting, as required.

(5) Windfarm Lighting

(a) Individual wind turbine structures

Individual wind turbine structures shall be lighted by mounting two medium intensity type B lights on top of the generator housing and should flash simultaneously. Lighting fixtures are to be mounted at a horizontal separation to ensure an unobstructed view of at least one fixture by an aircraft approaching from any angle of azimuth. No intermediate level lights are required on these structures.

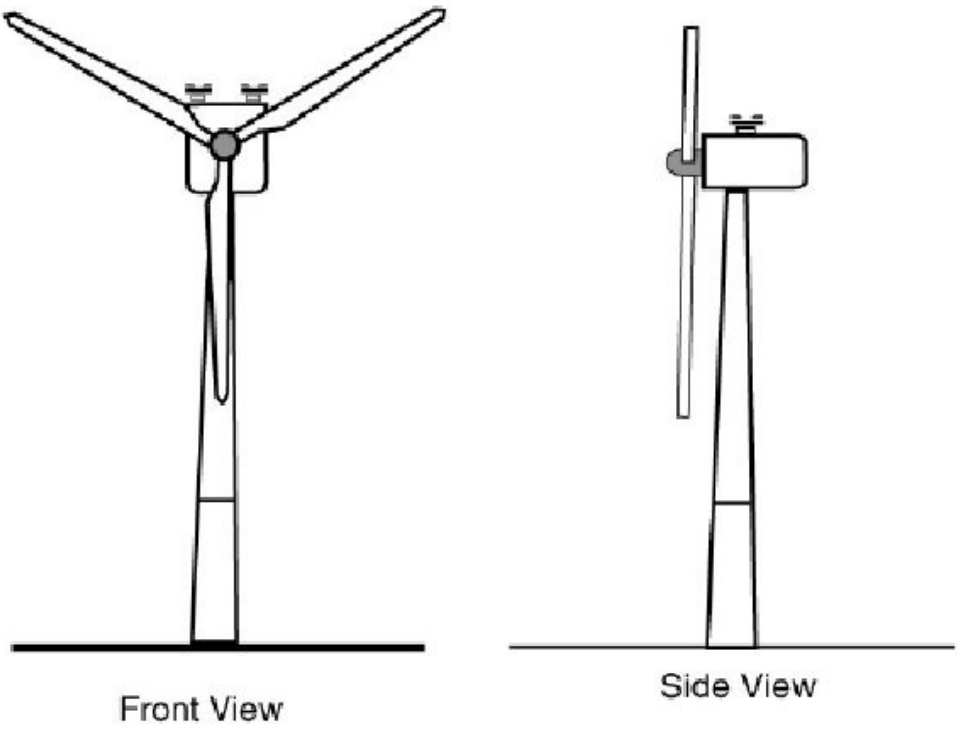

Lighting of individual wind turbines

(b) Windfarm (3 or more units) Lighting

In determining the required lighting of a Windfarm, it is important to identify the layout of the Windfarm first. This will allow the proper approach to be taken when identifying which turbines need to be lit. Any special consideration to the site's location in proximity to aerodromes or known corridors, as well as any special terrain considerations, must be identified and addressed at this time.

Details are as follows:

(i) Not all wind turbine units within an installation or Windfarm need to be lit. Definition of the periphery of the installation is essential. Lighting of interior wind turbines is of lesser importance unless they project above the peripheral units. This can be the case when higher ridges or plateaus are present within the Windfarm area.

(ii) Obstruction lights within a group of wind turbines should have unlighted separations or gaps of no more than 800m if the integrity of the group appearance is to be maintained. This is especially critical if the arrangement of objects is

essentially linear, as is the case with most wind turbine groups.

(iii) Any array of flashing or pulsed obstruction lighting, intended to warn of a group of wind turbines forming an entity (i.e., a line, string, or series of units), shall be synchronised to flash simultaneously. If an installation consists of a number of widespread, but obviously separated areas or entities more than 1500 m from each other, it is not necessary that all such areas flash synchronously.

(iv) Night time wind turbine obstruction lighting should consist of medium intensity type B aviation red flashing lights. Minimum intensities of 2000 candela for night-time red flashing or strobe lights are required.

Note: Steady-burning obstruction lights shall not be used.

(v) White medium intensity type “A” strobe lights may be used in lieu of the preferred medium intensity type “B” strobe lights, but must be used alone without any red lights, and must be positioned in the same manner as the red flashing lights.

(vi) Since the hub of the wind turbine unit is frequently as large as the nacelle (body) itself, a top-mounted obstruction light should be raised well above the surface of the nacelle so that it may be easily seen from directly in front of the turbine. Placement of the light fixtures on the turbine nacelle should be accomplished to ensure that they are visible from 360 degrees, with particular attention being made to ensure that the hub of the turbine rotor in no way blocks the light from an aircraft approaching the windward side of the turbine at the same elevation as the turbine hub.

(vii) When possible, antennas or towers of heights over 45 m that are within the turbine farm area should be incorporated into the lighting plan for the site, as they offer tall, unobstructed platforms on which lighting fixtures can be mounted and should be included in the synchronisation and spacing calculations.

(viii) Each turbine should only require one fixture if the site is monitored, and that a failed light fixture can be replaced

within the next working day. Failure to replace a failed fixture, which is essential to maintaining the 800 m-separation requirement, will result in an unsafe gap in the lighting configuration. If the facility does not possess the capability to replace fixtures within the next working day, each turbine shall be fitted with two separate fixtures.

(ix) A well-balanced lighting plan has all the light fixtures within the Windfarm flash at the same time, thus delineating the farm as one large obstruction and navigation between the turbines should be discouraged. The synchronisation function can be accomplished through various means, either by radio frequency devices, hard-wired control cables, or independently mounted global positioning system synchroniser units. The site developer can decide the selection of the units, as long as the end result is that all lights flash perceivably at the same time. If the developer fails to synchronise the fixtures, the developer will be required to add additional fixtures at closer spacing. The very basis of the lighting standards for Windfarms is centred on the synchronous flashing of the perimeter lighting.

(6) Turbine Lighting Assignment

The following guidelines should be followed to determine which turbines, need to be equipped with lighting fixtures. Again, the placement of the lights is contingent upon which type of configuration is being used.

(a) Linear: A light should be placed on each turbine positioned at each end of the line or string of turbines. From those end turbines, lights should then be positioned such that the next lit turbine is no more than 800 m, from the last lit turbine. This pattern should continue until the end of the string is reached. If the last segment is significantly short, it may be practical to move the lit turbines back one or two turbines towards the starting point to present a nice, well-balanced string of lights. A high concentration of lights, in close proximity, should be avoided.

(b) Cluster: A starting point should be selected along the outer perimeter of the cluster. This turbine should be lit, and then, continuing along the outer perimeter of the farm, a light should be placed on the next turbine with the maximum gap between the lit

turbines being no more than 800 m. This pattern should continue around the perimeter of the cluster, and end at the starting point. If it appears that the lights are crowded at the ending point, the lit turbines may be moved back by one turbine to present a balanced lighting presentation. If it is determined that the distance across the cluster is of a distance greater than 1500m, or the terrain may vary within the cluster (+30 m from the perimeter elevations), it may be appropriate to place a few lit turbines at strategic locations throughout the centre of the cluster. This will prevent pilots from believing they may be able to climb over the outer perimeter and descend down into the centre of the cluster. Discretion should be used when placing these lights to maintain a well-balanced, safe lighting configuration.

(c) Grid: Initially, each of the defined corners of the grid layout should be selected for lighting, and then, using the same concept of the cluster configuration, lights should be placed on turbines along the outer limits of the farm so that the maximum spacing between lit turbines is no more than 800m. If it appears as though the end of the lighting strings may be crowded, it may be necessary to move the lights back one or two turbines to create an even lighting configuration. If the grid is more than 1500 m wide across the centre of the group of turbines, it may be appropriate to position one or two lights within the centre of the configuration to again provide warning to pilots attempting to climb over the outer limits of the grid, and descending into the centre of the grid. Elevation should also be considered.

(d) Special Instances: On occasion, if one or two turbines may be positioned at locations that do not lend themselves to the linear, cluster, or grid layouts, the following guidelines should be followed. If the turbine protrudes from the general limits of the Windfarm, the turbine should automatically receive a lighting fixture. If another turbine is collocated with the first turbine, it does not require any lighting as long as it is within 150 m from the lit turbine and not positioned on the outboard side of the lit turbine. If these requirements cannot be met, both turbines, in this case, would need to be illuminated.